總代理
思沛雅噴霧器材有限公司
22205 新北市深坑區北深路三段270巷8號3樓 TEL. 02-8662-6968 FAX. 02-8662-6967
Website : www.sprayernozzle.com.tw E-mail : sales@sprayernozzle.com.tw

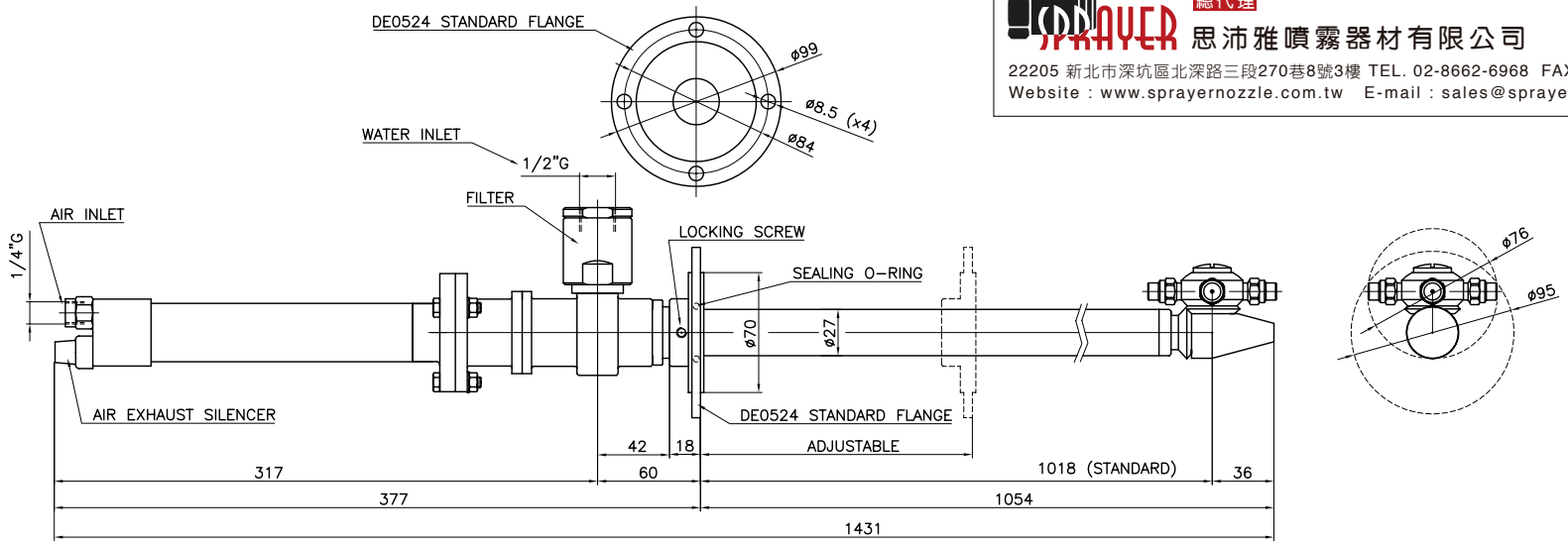

ROTATION SPEED AIR PRESSURE AND CONSUMPTION		
19 RPM	1 bar	155 L/min
28 RPM	2 bar	230 L/min
33 RPM	3 bar	275 L/min
37 RPM	4 bar	320 L/min
40 RPM	5 bar	360 L/min
51 RPM	6 bar	395 L/min

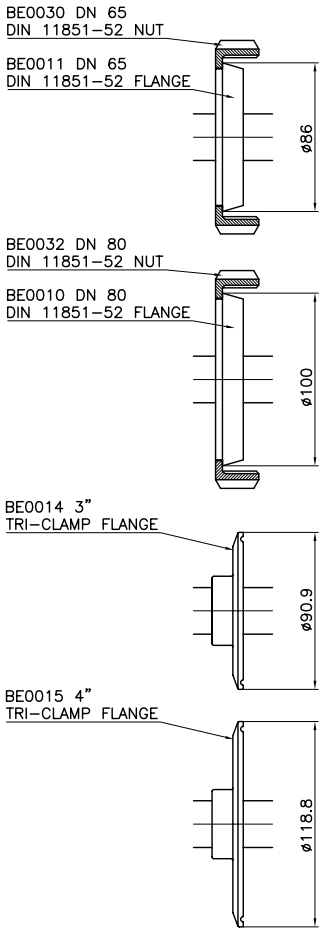

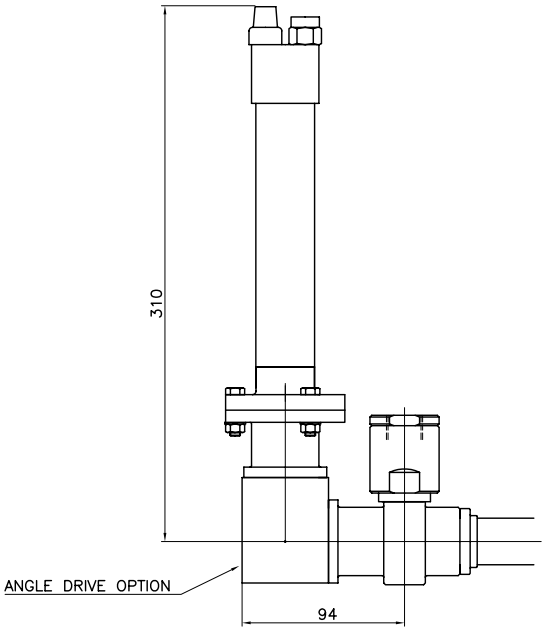

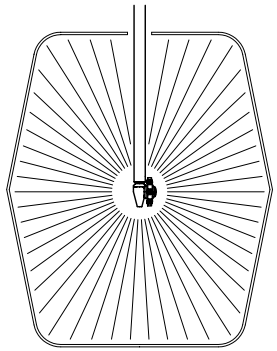

TECHNICAL DATA	
O.RING	NBR – EPDM – VITON
SLIPPER	PTFE+CARBON FIBRE
BUSHING	AISI 316
FILTER	700 MICRON
NOZZLES POSITIONS	2 – 4
NOZZLES THREAD	1/8"NPT
TESTING NOZZLES	0 x 0000
OPERATING FLOW RANGE	0 – 60 L/min
TESTING FLOW	00 L/min
OPERATING PRESSURE RANGE	0 – 200 bar
TESTING PRESSURE	000 bar
CENTER LINE MIN PASS THROUGH HOLE	95 mm
MANUAL MIN PASS THROUGH HOLE	76 mm
PIPE LENGHT	1018 mm (STANDARD)
MAX OPERATING TEMPERATURE	90 °C
MATERIAL	INOX AISI 316
CONICAL GEARS	FIXED Z=29 ROTATING Z=31
MODULE	1
FULL CYCLE	31 ROTATIONS
FULL CYCLE TIME	1 min AT 3 BAR AIR PRESSURE
AIR MOTOR	BA0705 FIAM ML5Z
AIR EXHAUST	WITH SILENCER
ROTATION SPEED	SEE CHART
WEIGHT	7.5 KG

RUGOSITA' (UNI 4600)
GREZZO ~ = 6.3
SGROSS. ▽ = 3.2
FINITURA ▽▽ = 1.6
RETTIFICA ▽▽▽ = 0.8

MODIFICA	1	2	3	4	5
FOGLIO	XXXX				
DATA	XX.XX.XX				

TOLLERANZE GENERALI classe m UNI-EN 22768/1

0÷6	6÷30	30÷120	120÷400	400÷1000	1000÷2000
±0.1	±0.2	±0.3	±0.5	±0.8	±1.2

NOTE:

DESCRIZIONE: XC 061 P
APPLICATION DRAWING

Bolondi CLEANING HEADS
MONTECCHIO E. (RE) – ITALY

DISEGN.: CR CONTR.: DM
DATA: 06.10.08 MOD.
SCALA 1:3 A3 0
CODICE: XC 061 P